TECHNICAL MANUAL



BOLDA® Column Shoe

Strong and Optimized Bolted Column Connections

www.fastcon.ru

Fastcon

Fastcon

BOLDA® Column Shoe

Strong and Optimized Bolted Column Connections

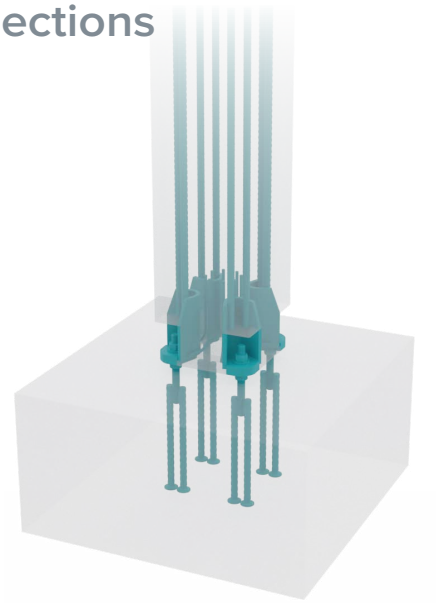

- Full-scale tested and approved connection – bending, stiffness, shear and fire resistances
- Safe, simple and quick erection of precast column with no bracing and welding
- Fast and cost-efficient column assembly with reduced man- and crane-hours
- Advanced casting process with the help of standard accessories
- Column assembled in 10 minutes
- Covered and verified by European Technical Assessment (ETA)
- CE marked high performance Column Shoe

BOLDA® Column Shoes are construction products to form fast and safe connections between precast concrete columns and foundations, or between precast concrete columns. BOLDA® Column Shoes are used with PPM® High-Strength Anchor Bolts or COPRA® Anchoring Couplers to create moment-resisting column connections under heavy loading conditions.

The standard bolted column connection is made using column shoes and anchor bolts. The column shoes are cast into precast concrete column, while anchor bolts are cast into the foundation or another column. On the construction site, the columns are erected onto the anchor bolts and adjusted to the correct level and vertical position. Fixing is achieved by tightening nuts on the anchor bolts. The joint between the column and the structure below should be grouted before the column is loaded. The connection acts as a reinforced concrete structure after the grout has reached the designed strength.

The main advantage in using bolted connections is that an immediate connection is made with a small crew. Column is installed without temporary bracing only by leveling and tightening the nuts.

With a help of standard accessories casting process is quick and easy both at precast factory and construction site. Solution is cost-efficient by final savings coming from reduced excavation depth of the foundation, simplified supplementary reinforcement frame and less man- and crane-hours.





CONTENTS

About BOLDA® Column Shoe 4

1. Product properties 4

1.1 Structural behavior 5

1.1.1 Temporary conditions 5

1.1.2 Final conditions 5

1.2 Application conditions 6

1.2.1 Loading and environmental conditions 6

1.2.2 Interaction with column 6

1.2.3 Positioning of the column shoe 8

1.3 Other properties 9

2. Resistances 10

2.1 Axial resistance 10

2.2 Shear resistance 11

2.3 Fire resistance 12

Selecting BOLDA® Column Shoe 13

Annex A – Transverse reinforcement in the lap zone and supplementary reinforcement 15

Annex B – Alternative use of BOLDA® Column Shoe 17

Installation of BOLDA® Column Shoe 19

Precast factory – Casting of BOLDA® Column Shoe 19

Construction site – Assembling the connection 21

About BOLDA® Column Shoe

1. Product properties

BOLDA® Column Shoes are available in several standard models to solve the most of precast concrete column connections. The original Fastcon Column Connection system consists of:

- Column shoes
- Anchor bolts
- Accessories: recess formers and installation templates.

BOLDA® Column Shoes are used with PPM® High-Strength Anchor Bolts to achieve moment resisting precast concrete column connections. Column Shoes are cast into the bottom part of the column together with main and supplementary reinforcement, detailed in Annex A of this manual. PPM® High-Strength Anchor Bolts are either cast into foundation (column to foundation connection) or in the top part of lower column (column to column connection). Column shoe has a round hole that fits with the corresponding anchor bolt. The column connection is achieved by fastening the anchor bolts to column shoes by using nuts and washers. The bolted connection offers sufficient assembly tolerances to adjust the column at the correct level and vertical position. To finalize the connection, the joint underneath the column and recesses are grouted with non-shrink grout material, whose strength must be at least equal to the strength of the concrete of the column above the joint.

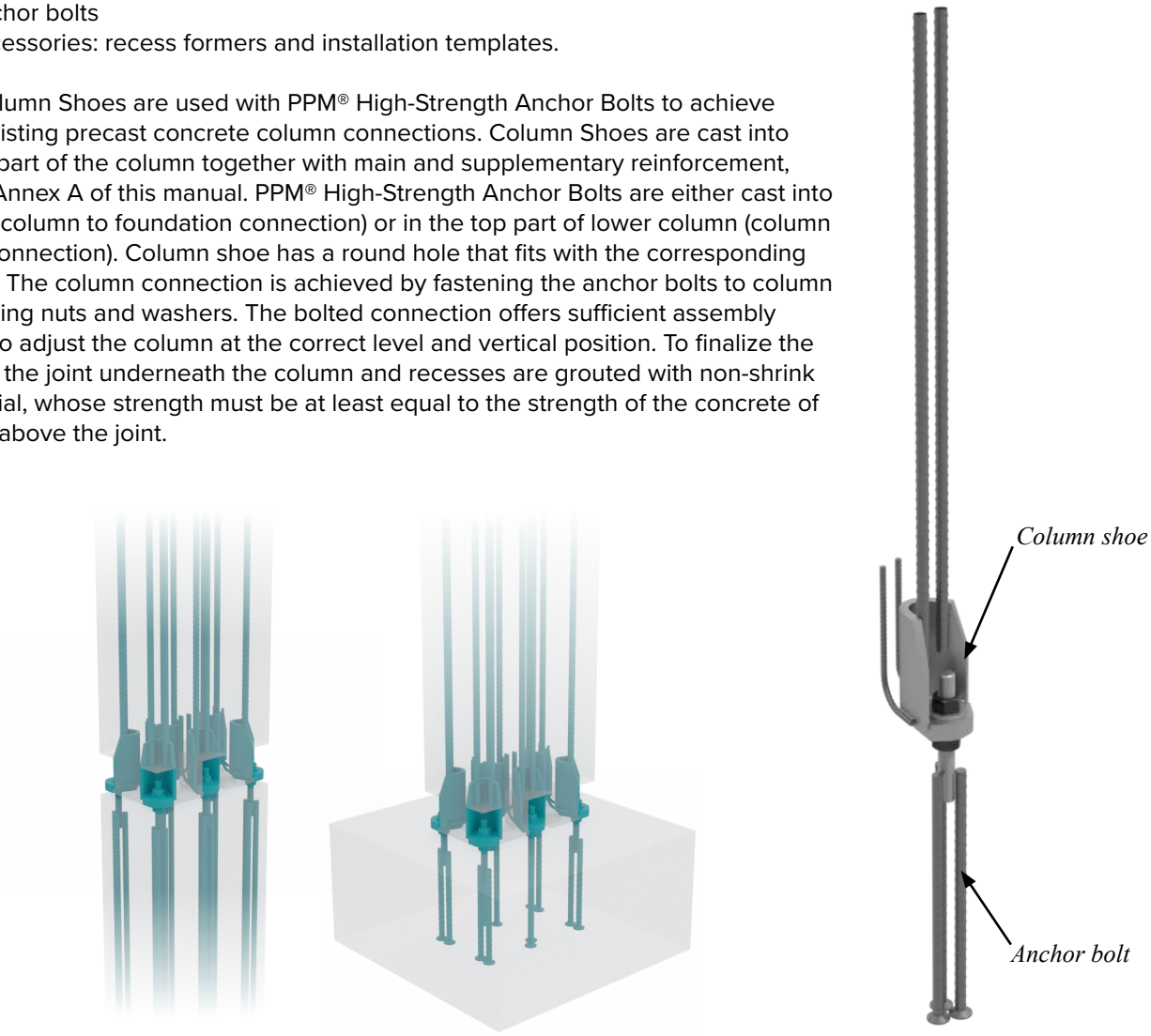

Figure 1. BOLDA® Column Shoes and PPM® High-Strength Anchor Bolts in column connection.

Resistances of single BOLDA® Column Shoes are equal to the resistances of corresponding PPM® High-Strength Anchor Bolts or COPRA® Anchoring Couplers. For more information about anchor bolts and couplers, see the Technical Manual of PPM® High-Strength Anchor Bolts or COPRA® Anchoring Couplers.

Fastcon column connection can be designed to resist axial forces, bending moments, shear forces and their combinations and fire exposure. The appropriate type of column shoe and anchor bolt to be used for the connection can be selected and the connection resistance checked by Fastcon technical support. It is possible to use four or more column shoes in one column cross-section depending on the dimensions of the column and the magnitude of forces to be transmitted.

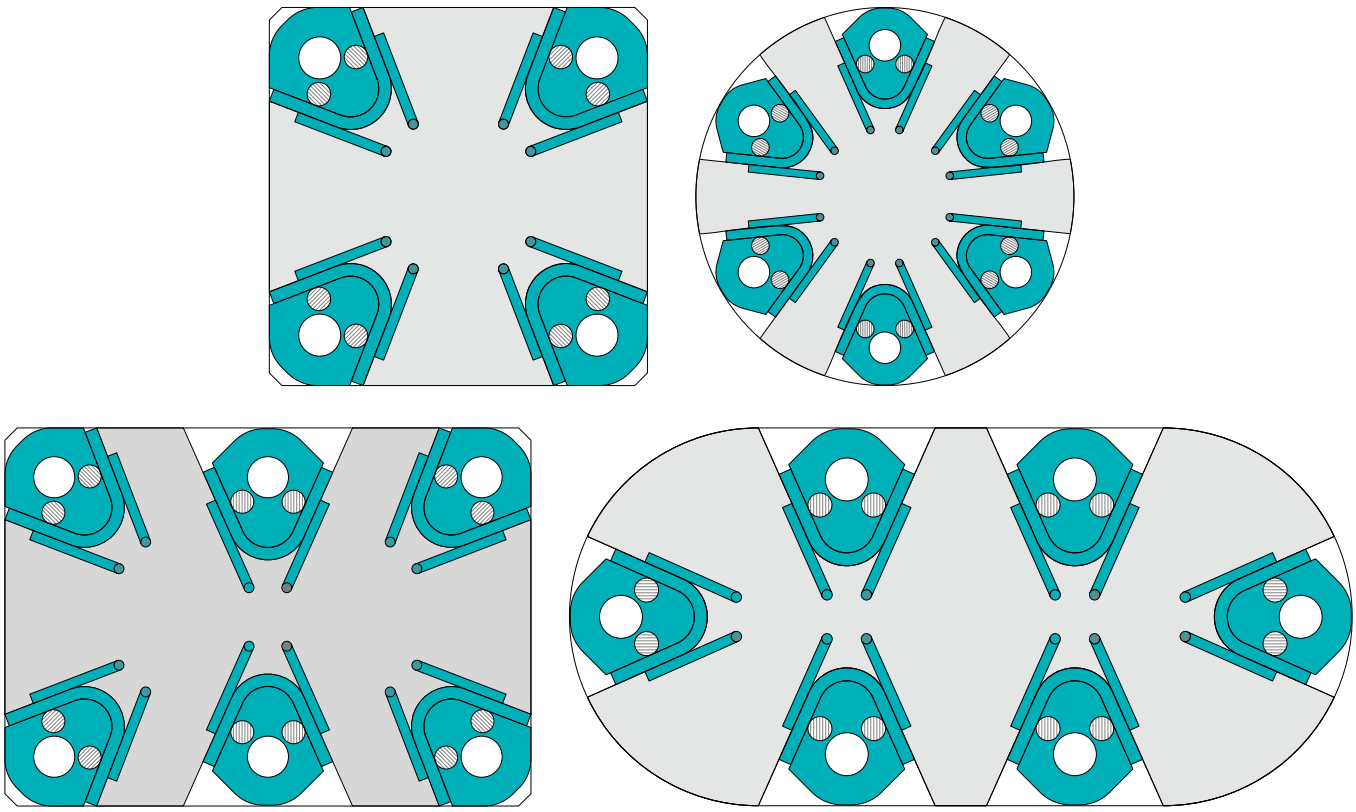

Figure 2. Arrangement of BOLDA® Colum Shoes in different column cross-sections.

1.1 Structural behavior

BOLDA® Column Shoes are pre-designed so that they have sufficient resistance against maximal design values of tensile, compressive and shear forces from the corresponding PPM® High-Strength Anchor Bolts or COPRA® Anchoring Couplers.

1.1.1 Temporary conditions

At erection stage the forces loading column shoes are caused principally by self-weight of the column and bending moment and shear force due to wind load. Since the joint between the column and the base structure is not grouted, all the forces from the column shoes are carried solely by anchor bolts. The bolts must be designed for buckling and bending. If the size of the bolt is not sufficient for the load, size or number of bolts and column shoes should be increased. The open joint underneath the column and recesses shall be grouted by non-shrink grout and its' strength shall be enough hardened according to execution specifications before the column is loaded by other structures.

1.1.2 Final conditions

In the final stage, after the grout has reached the designed strength, the connection acts as a reinforced-concrete structure. Column shoes in interaction with anchor bolts and grout are able to resist actions designed for final conditions. The behavior of the connection has been verified to fulfill requirements of cast-in-situ reinforced columns when designing according to ETA assessment of these products.

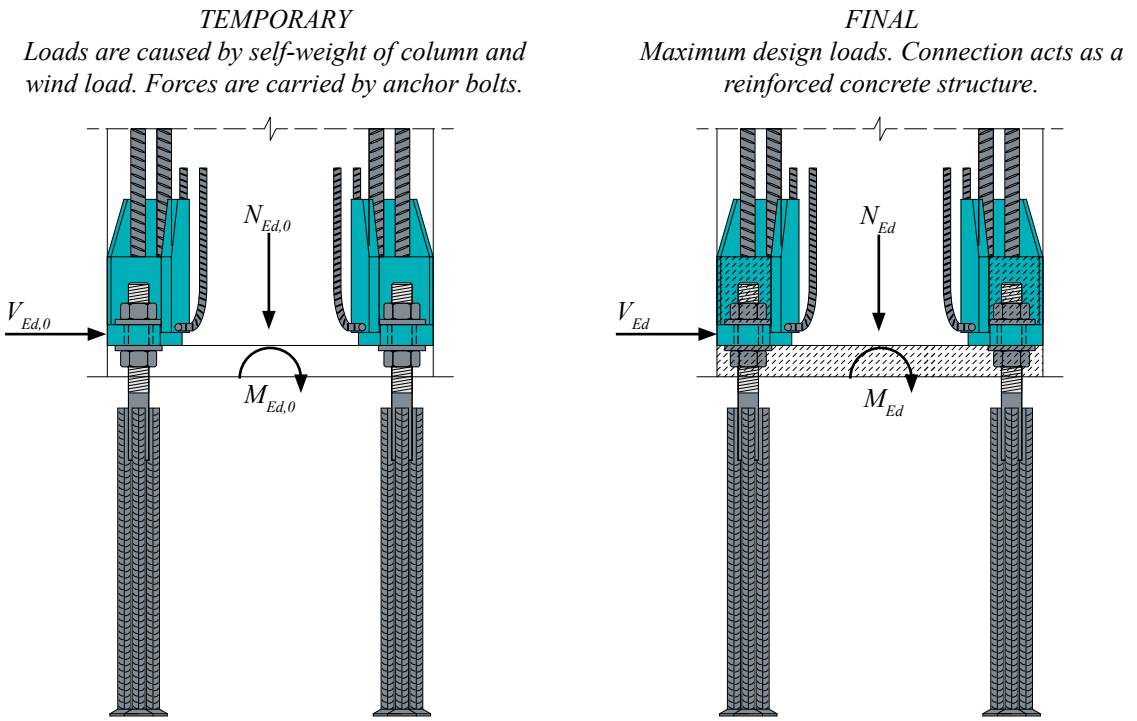

Figure 3. Structural behavior of the column connection under temporary and final conditions.

1.2 Application conditions

The standard models of BOLDA® Column Shoes are pre-designed to be used under conditions mentioned hereafter in this chapter. In the case when these conditions may not be satisfied, please contact Fastcon Customer Engineering Service for individual design of BOLDA® Column Shoes.

1.2.1 Loading and environmental conditions

BOLDA® Column Shoes are designed to bear static loads. In the case of dynamic, fatigue or seismic loads, individual design shall be made.

Column Shoes are designed to be used in indoors and dry conditions. When using BOLDA® Column Shoes in other conditions, the surface treatment, concrete cover or raw materials must be adequate according to environmental exposure class and intended operating life.

1.2.2 Interaction with column

BOLDA® Column Shoes are pre-designed to be used in reinforced concrete columns with minimum dimensions summarized in *Table 1*. If column shoes must be placed in the column with smaller dimensions, please contact Fastcon Customer Engineering Service.

Table 1. The minimum sizes of column cross-section and spacing [mm] for standard BOLDA® Column Shoes.

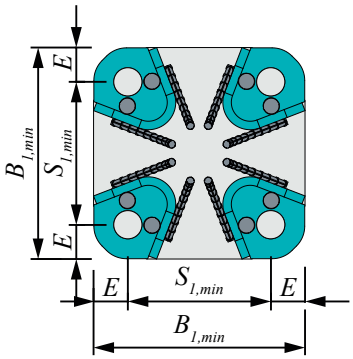

Shoe	BOLDA 30	BOLDA 36	BOLDA 39	BOLDA 45	BOLDA 52
$B_{1,min}$	310	360	395	440	500
$S_{1,min}$	210	240	275	320	360
E	50	60	60	60	70

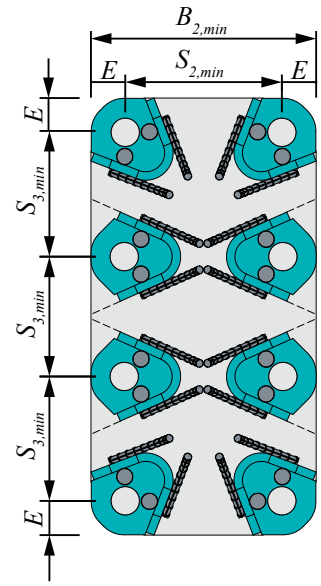

Shoe	BOLDA 30	BOLDA 36	BOLDA 39	BOLDA 45	BOLDA 52
$B_{2,min}$	350	405	450	510	550
$S_{2,min}$	250	285	330	390	410
$S_{3,min}$	160	180	205	230	275
E	50	60	60	60	70

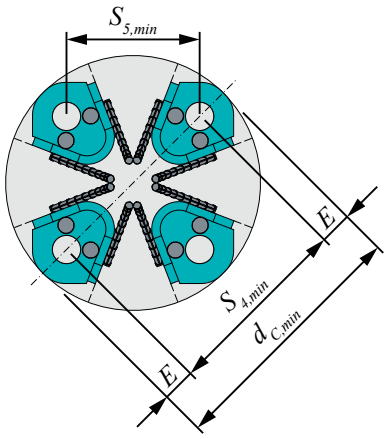

Shoe	BOLDA 30	BOLDA 36	BOLDA 39	BOLDA 45	BOLDA 52
$d_{C,min}$	400	460	510	575	650
$S_{4,min}$	300	340	390	455	510
$S_{5,min}$	212	240	276	322	361
E	50	60	60	60	70

$S_{5,min} = \frac{d_{C,min} - 2E}{\sqrt{2}}$, where E is taken from the tables above.

The standard properties of BOLDA® Column Shoes are guaranteed in reinforced concrete columns made of concrete grade C35/45 or higher. The strength of grout in the joint must be at least equivalent or higher than the designed concrete grade of the column. For minimum concrete grade for anchor bolts, see Technical Manual of PPM® High-Strength Anchor Bolts or COPRA® Anchoring Couplers.

The structural properties of BOLDA® Column Shoes are guaranteed only if supplementary reinforcement is provided in the column in accordance with rules of Annex A of this Technical Manual. It is notable that the supplementary reinforcement is used in addition to the main reinforcement designed to resist internal forces in the column.

1.2.3 Positioning of the column shoe

The concrete covers of main anchor bars of each BOLDA® Column Shoe are presented in *Table 2* when BOLDA® Column Shoe is located at the corner or in the middle position of column (see *Figure 4* and *Table 2*).

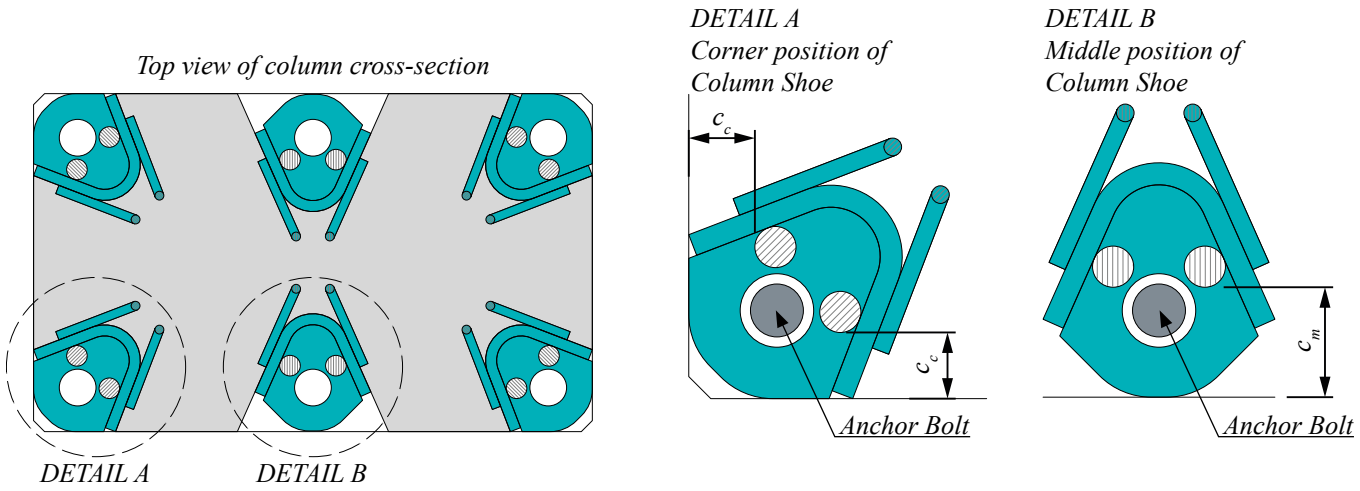

Figure 4. Concrete cover of main anchor bars – corner and middle position of column shoe.

Table 2. Concrete cover of main anchor bars in corner and middle position of column shoe.

	BOLDA 30	BOLDA 36	BOLDA 39	BOLDA 45	BOLDA 52
Corner concrete cover c_c [mm]	43	47	47	47	47
Middle concrete cover c_m [mm]	70	77	82	87	96

If higher values of concrete cover are required ($c_{req} > c_c$ *or* $c_{req} > c_m$), BOLDA® Column Shoes need to be placed towards center of the column (see *Figure 5*). To prevent concrete to fill up the pocket during casting, the recess boxes may be used. When column shoes are located away from column surface, there are special request to prevent the concrete to fill up the the gap of Δ_c size. For detailed information see the installation chapter of BOLDA® Column Shoes.

NOTE!
When column shoes are moved towards center of the column, the anchor bolts should be moved accordingly in the bolt assembly drawings.

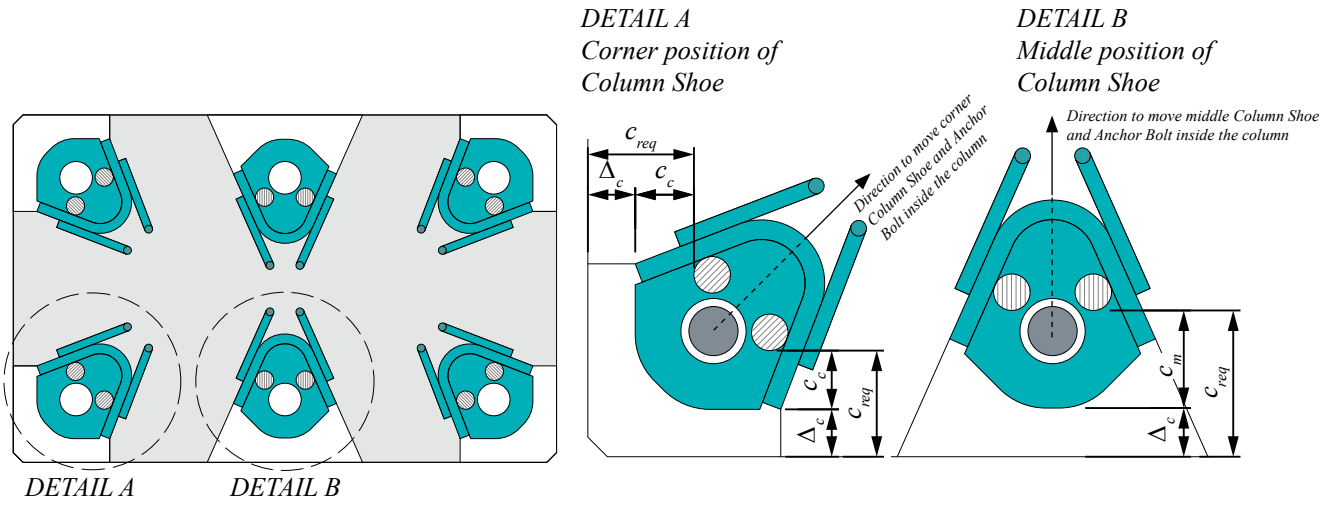

Figure 5. Concrete cover of main anchor bars – determination of required concrete cover thickness c_{req}.

1.3 Other properties

BOLDA® Column Shoes are fabricated of steel plates and reinforcement steel with the following material properties:

Steel plates	S355J2+N	EN 10025-2
Ribbed bars	B500B	EN 10080

Fastcon's production units are externally controlled and periodically audited on the basis of production certifications and product approvals by various organizations, including Inspecta Certification, Eurofins Expert Services, Nordcert, SLV, TSUS and SPSC among others.

Products are marked with the CE marking and the emblem, the type of product and year and week of manufacturing.

Table 3. Dimensions [mm], weights [kg] and color codes of BOLDA® Column Shoes.

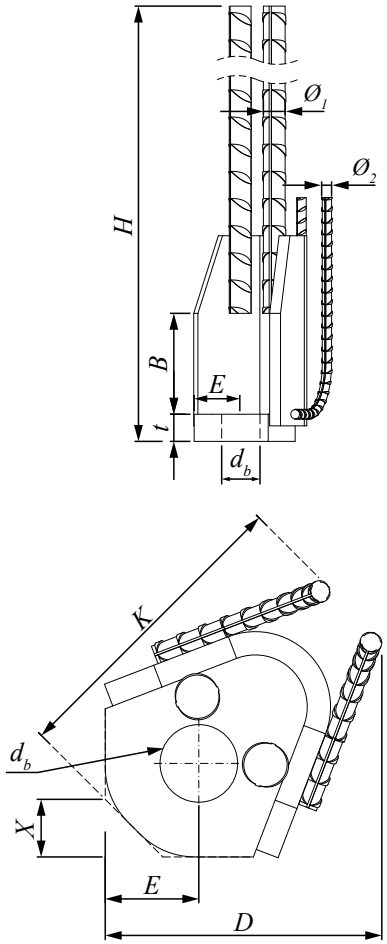

	BOLDA 30	BOLDA 36	BOLDA 39	BOLDA 45	BOLDA 52	Manufacturing tolerances
H	1058	1365	1600	1852	2190	± 10
t	30	35	40	50	55	
B	100	130	130	140	170	+3, -0
E	50	60	60	60	70	± 1
d_b	40	50	55	60	70	+2, -0
$Ø_1$	25	28	28	32	40	
$Ø_2$	10	12	14	16	16	
X	30	37	37	37	42	
D	153	178	195	217	245	
K	173	200	220	250	269	
Weight	13.7	22.6	29.4	42.5	74.9	
Color code	Black	Red	Brown	Violet	White	

Color code is marked on the base surface of BOLDA® base plate.

Lengths of anchor bars are designed following the requirements of EN 1992-1-1 and taking into account:

- Concrete grade C35/45 or higher.
- Poor bond conditions acc. to EN 1992-1-1.
- Reduced safety factor according to EN 1992-1-1, Annex A based on higher quality control system within the production of precast elements.
- Consideration of the transverse reinforcement present along the lap length (see *Table 7* and *Figure 8*).

2. Resistances

The resistances of BOLDA® Column Shoes are determined by a design concept that makes reference to the following standards and specifications:

- EN 1992-1-1:2004
- EN 1992-1-2:2004
- EN 1993-1-1:2005
- EN 1993-1-8:2005
- EAD 200102-00-0302 Column Shoes for structural connections of reinforced concrete columns
- TR 068:2020-03: Technical Report: Design of structural connections with column shoes
- ETA-20/0529.

2.1 Axial resistance

BOLDA® Column Shoes are designed to withstand tensile and compressive forces corresponding to the design values of resistances of PPM® High-Strength Anchor Bolts and COPRA® Anchoring Couplers. The maximum design values of resistances of individual BOLDA® Column Shoes are given in *Table 4*.

It is recommended to calculate column connection resistances using Fastcon technical support.

Table 4. Design values of tensile or compressive resistances of individual BOLDA® Column Shoes for concrete grade C35/45.

Column Shoe	Anchor Bolt	N_{Rd} [kN]
BOLDA 30	PPM 30 COPRA 30	299
BOLDA 36	PPM 36 COPRA 36	436
BOLDA 39	PPM 39 COPRA 39	521
BOLDA 45	PPM 45 COPRA 45	697
BOLDA 52	PPM 52 COPRA 52	938

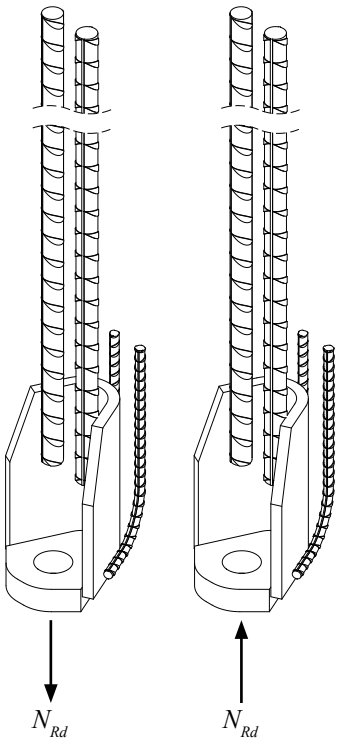

2.2 Shear resistance

The action effects at the connection are first divided to the individual column shoes.

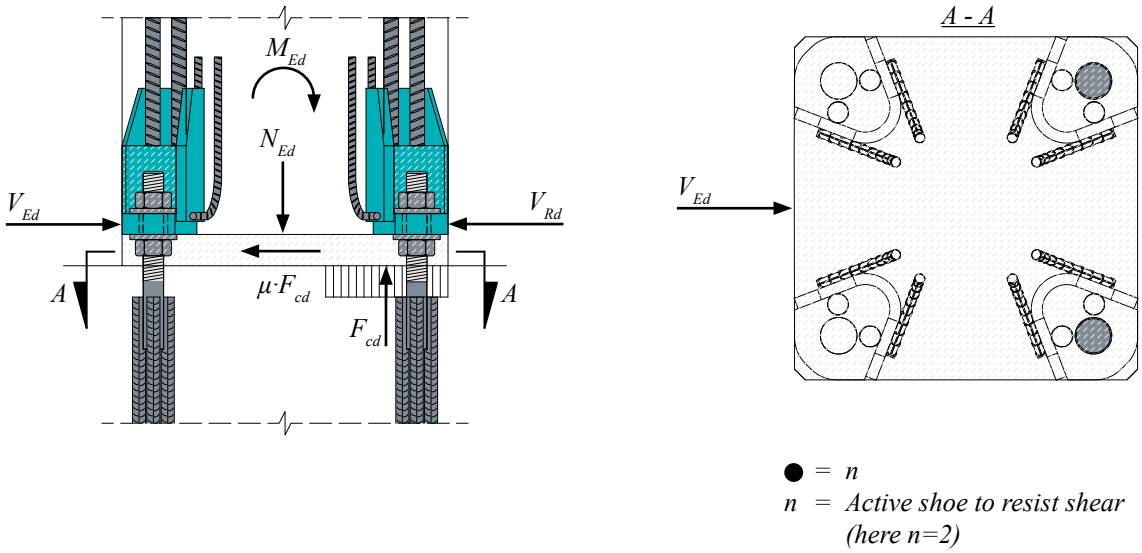

Figure 6. Column shoes on the right hand side are considered active against shear.

The design value of the shear force for a single column shoe on the active side, see *Figure 6*, is calculated from

$$V_{Ed}^{1} = \frac{V_{Ed} - \mu \cdot F_{cd}}{n}$$

where:

V_{Ed} = total shear force of column connection
F_{cd} = total compression force in column connection
NOTE: The resultant F_{cd} of the compression force is obtained by summing the compression components resulting from the bending moment M_{Ed} and the normal force N_{Ed}.
μ = friction coefficient between base plate and grout = 0.20 (according to EN 1993-1-8, Chapter 6.2.2)
n = the number of the individual active column shoes resisting shear force, see *Figure 6*

The shear resistance of a column shoe is equal to the shear resistance of corresponding anchor bolt.

Table 5. Design values of shear resistance V_{Rd} of individual BOLDA® Column Shoe.

		BOLDA 30	BOLDA 36	BOLDA 39	BOLDA 45	BOLDA 52
V_{Rd}	[kN]	89	130	155	207	279

The shear resistance of a column shoe subjected to shear and compression shall meet the requirement:

$$V_{Ed}^{1} \leq V_{Rd}$$

2.3 Fire resistance

The temperature development and critical minimum sections of unprotected Fastcon column connections were determined using experimental fire tests and numerical analysis. In tests the Fastcon column connections were exposed to standard fire according to standard EN 1363-1.

The concrete cover of the anchor bolt and the anchor bars of the column shoes should be at least equivalent to the concrete cover of the reinforcement of the precast element. If the fire resistance of the column shoe connection is judged to be insufficient, the concrete cover of the column shoe could be increased by moving column shoes towards center of the column and increasing the size of cross-section when necessary, see Section 1.2.3 Positioning of the column shoe and *Figure 5*.

Table 6. Time-temperatures [C°] of BOLDA® Column Shoe connections for fire design.

$T_{cr}(t)$ [°C]		BOLDA 30	BOLDA 36	BOLDA 39	BOLDA 45	BOLDA 52
Time [min]	R30	206	171	182	178	147
	R60	387	336	349	340	293
	R90	530	475	488	470	412
	R120	641	588	594	571	508

* temperatures are developed for minimum column dimensions

With the help of Fastcon technical support you can calculate the fire resistance of column connections in accordance with the EN 1992-1-2 standard.

Selecting BOLDA® Column Shoe

The following aspects have to be considered when selecting the appropriate type of BOLDA® Column Shoe to be used in a column connection:

- Resistance
- Properties of the column
- Properties of the grout
- Position and arrangement of the column shoes in the column
- Design values of actions and their interactions

The resistance of column connection should be verified for the following design situations:

- Erection stage
- Final stage
- Fire situation
- Environmental exposure conditions

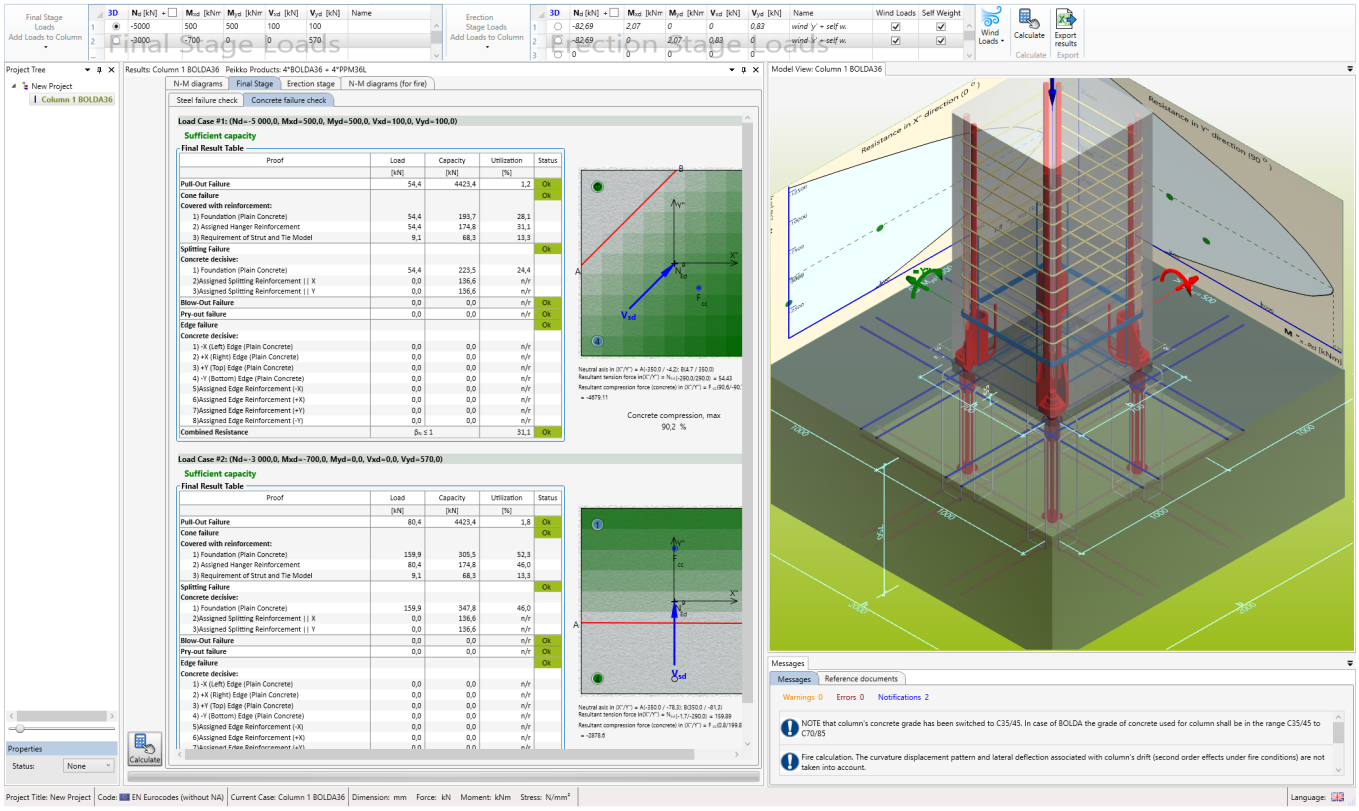

SELECTING

The typical selection procedure is done in the following steps:

USER INPUT

- Materials for column, structure under column and grouting
- Geometries of the column and structure under column
- Design values of the actions – erection, final, and fire stage
- Type of column shoes and anchor bolts
- Column shoe arrangement
- Column reinforcement (optional).

Annex A – Transverse reinforcement in the lap zone and supplementary reinforcement

Details of transverse reinforcement in the lap zone and supplementary reinforcement for BOLDA® Column Shoes are shown in following figures. Required quantities and lengths of stirrups are given in the *Table 7*.

Table 7. Transverse reinforcement in the lap zone and supplementary reinforcement (B500B).

	BOLDA 30	BOLDA 36	BOLDA 39	BOLDA 45	BOLDA 52
① U-Stirrup	4 Ø 6	4 Ø 8	4 Ø 10	4 Ø 12	4 Ø 12
② U-Stirrup	2 Ø 6	2 Ø 8	2 Ø 10	2 Ø 12	2 Ø 12
③ Stirrup	2 Ø 10	3 Ø 10	3 Ø 12	4 Ø 12	4 Ø 12
④ Stirrup	2 Ø 10	3 Ø 10	3 Ø 12	4 Ø 12	4 Ø 12
⑤ Stirrup	Ø 10	Ø 10	Ø 12	Ø 12	Ø 12
a	210	265	280	310	385
w	100	100	100	100	100
l_b	310	410	520	620	620

All dimensions given in millimeters [mm]

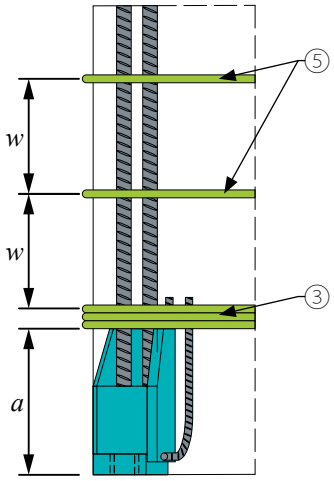

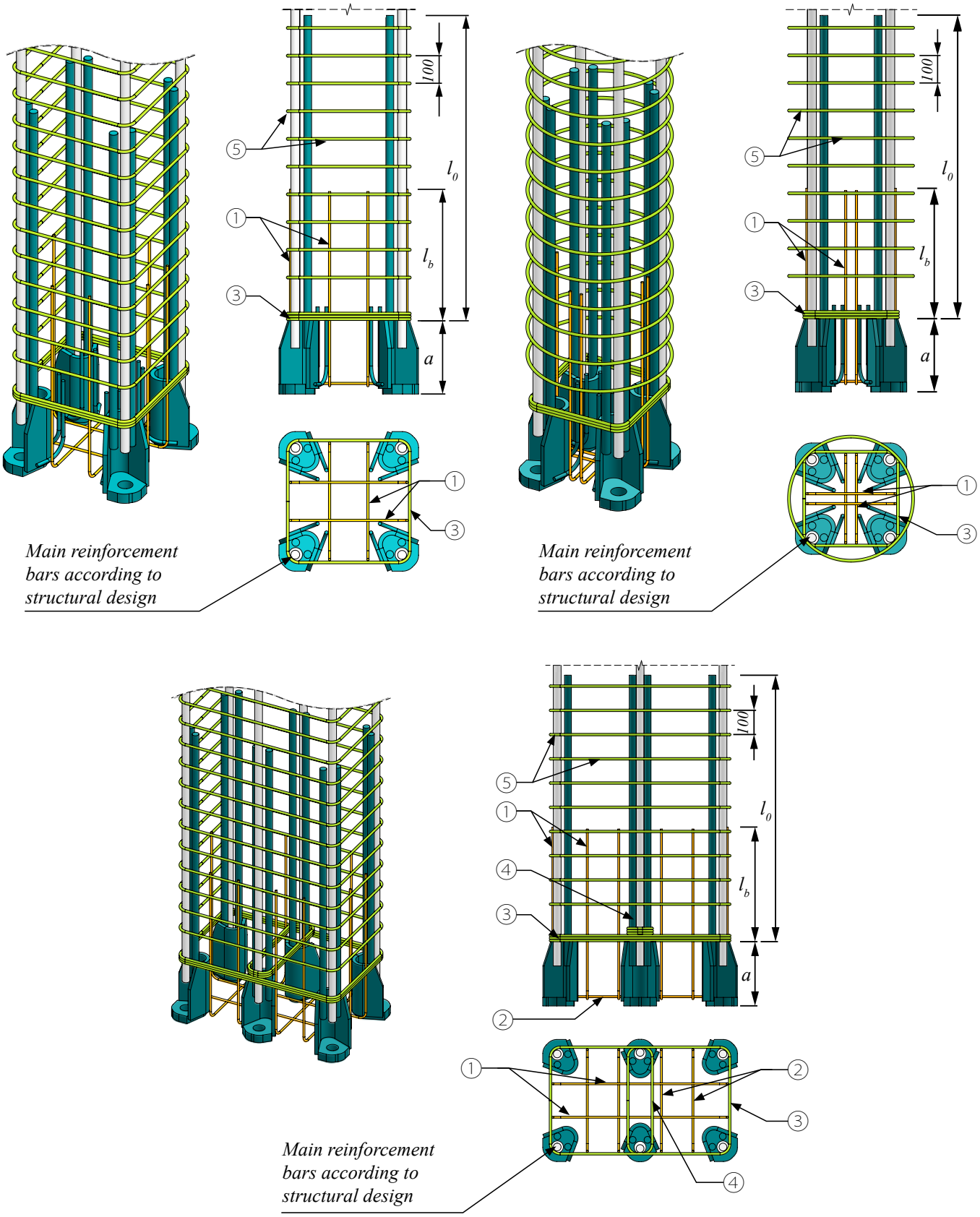

Figure 8. Transverse and supplementary reinforcement needed for BOLDA® Column Shoes (BOLDA 36 shown in the pictures).

Annex B – Alternative use of BOLDA® Column Shoe

Column shoes on an integrated steel plate

In the case when column shoes are colliding in the column (column cross-section is too small for the column shoes designed for the column) an integrated steel plate may be used to connect shoes together. By welding column shoes on the plate, the rear anchor bars may be removed to reduce required space, but forces transferred by rear anchor bars shall be transmitted with weld joints and steel plate. The steel plate may be used as an end plate of the mold as well. The minimum clear distance between anchor bars and side plates of column shoes should be not less than distance requirements according to EN 1992-1-1, chapter 8.2. Supplementary reinforcement for anchor bolt's group must be checked.

Shoes on integrated steel plates are manufactured according to customer's specifications. Please ask more instructions from Fastcon Customer Engineering Service.

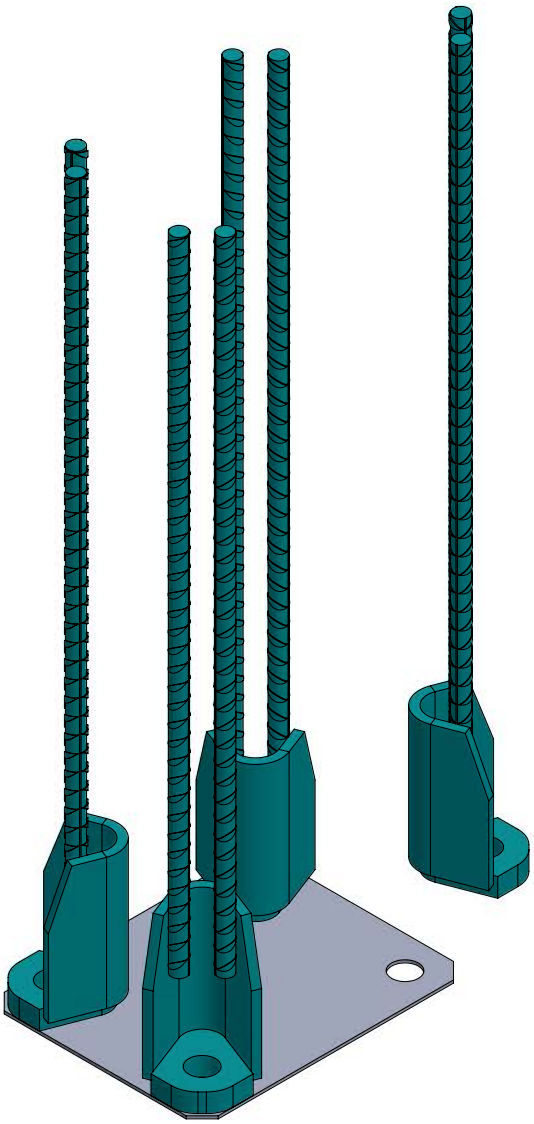

Figure 9. Column shoes on an integrated steel plate.

Self-made recess formers

Recess formers can be alternatively made by customers themselves, according to required dimensions shown in *Table 8* and *Table 9*. They can be made of wood, polystyrene or similar material. Column shoes should be fixed into the formwork properly either by bolting them to end plate of the mold or welding all shoes together.

Table 8. Dimensions of corner recess boxes to use with BOLDA® Column Shoe.

Corner recess former – dimension [mm]	a	b	c	d	h_1	w_1	l_1	h_1	h_2
BOLDA 30 [1]	40	53	78	19	25	115	124	88	103
BOLDA 36 [1]	52	58	90	24	27	133	141	114	131
BOLDA 39 [1]	52	64	92	27	28	142	149	114	133
BOLDA 45 [2]	52	75	103	31	30	158	170	122	144
BOLDA 52 [2]	59	92	109	45	35	189	196	150	175

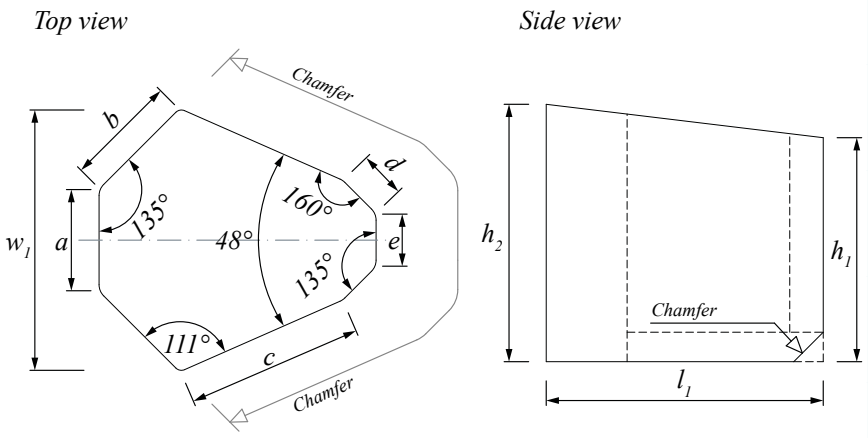

[1] Chamfer 10 × 10 mm required on bottom part of recess
[2] Chamfer 15 × 15 mm required on bottom part of recess

Table 9. Dimensions of middle recess boxes to use with BOLDA® Column Shoe.

Middle recess former – dimension [mm]	c	d	e	f	g	w_2	l_2	h_3	h_4
BOLDA 30 [1]	78	19	25	96	20	133	124	88	103
BOLDA 36 [1]	90	24	27	110	20	154	141	114	131
BOLDA 39 [1]	92	27	28	115	20	166	149	114	133
BOLDA 45 [2]	103	31	30	135	20	190	170	122	144
BOLDA 52 [2]	109	45	35	128	40	213	196	150	175

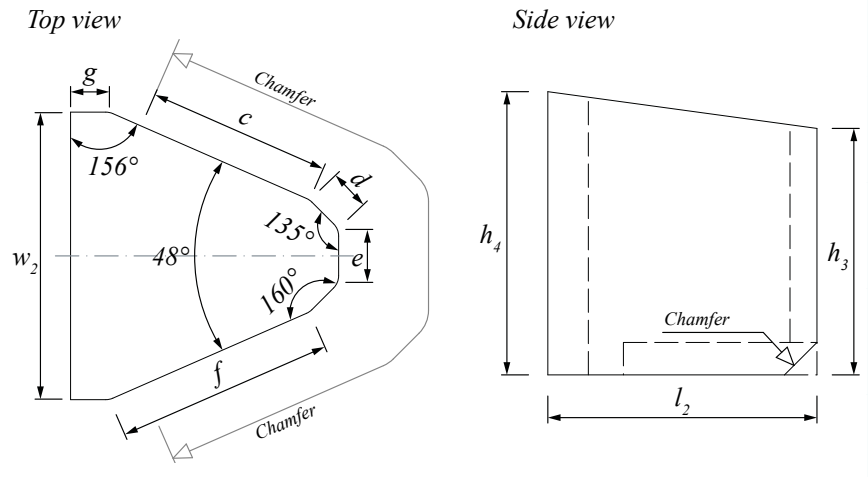

[1] Chamfer 10 × 10 mm required on bottom part of recess
[2] Chamfer 15 × 15 mm required on bottom part of recess

Installation of BOLDA® Column Shoe

Precast factory – Casting of BOLDA® Column Shoe

Identification of the product

BOLDA® Column Shoes are available in standard models (30, 36, 39, 45 and 52) analogous to M-thread sizes of the PPM® High-Strength Anchor Bolts or COPRA® Anchoring Couplers. The model of column shoe can be identified by the name in the label on the product and also according to the color of the product. Color codes are shown in the table hereafter. Color codes of recess boxes are corresponding to the color codes of BOLDA® Column Shoes.

BOLDA® Column Shoe with corresponding recess box.

Column Shoe	Anchor Bolt	Corner recess	Middle recess	Color code
BOLDA 30	PPM 30 / COPRA 30	BOLDA 30 CBOX	BOLDA 30 MBOX	Black
BOLDA 36	PPM 36 / COPRA 36	BOLDA 36 CBOX	BOLDA 36 MBOX	Red
BOLDA 39	PPM 39 / COPRA 39	BOLDA 39 CBOX	BOLDA 39 MBOX	Brown
BOLDA 45	PPM 45 / COPRA 45	BOLDA 45 CBOX	BOLDA 45 MBOX	Violet
BOLDA 52	PPM 52 / COPRA 52	BOLDA 52 CBOX	BOLDA 52 MBOX	White

Installation of the column shoes

BOLDA® Column Shoes are placed into the reinforcement of the column and fixed through their base plates to the end plate of the mold with recess boxes. Installation tolerance of column shoe in crosswise direction of the column is ± 2 mm. Supplementary reinforcement must be placed at the area of column base, according to drawings (Technical Manual Annex A). After casting the column, boxes are removed from shoes and voids are checked that they are clean from concrete.

Recess boxes are fixing accessories used to form pockets in concrete column for anchor bolts. There are separate recess boxes available for all types of column shoes and depending on the column shoe position in column´s cross-section:

- CBOX is used with column shoes fixed in corner of the column
- MBOX is used with column shoes fixed in middle of the column

Recess boxes enable the shoes to be fastened and positioned to the end plate of the mold. The wing screw M16, which comes with a spacer equal to the size of the column shoe's bolt hole, is used for fixing. With the help of the spacer, the shoe can be fixed to the correct place in the end plate. Environmental friendly formers are very durable and re-usable. It is recommended to maintain them to achieve long operating life.

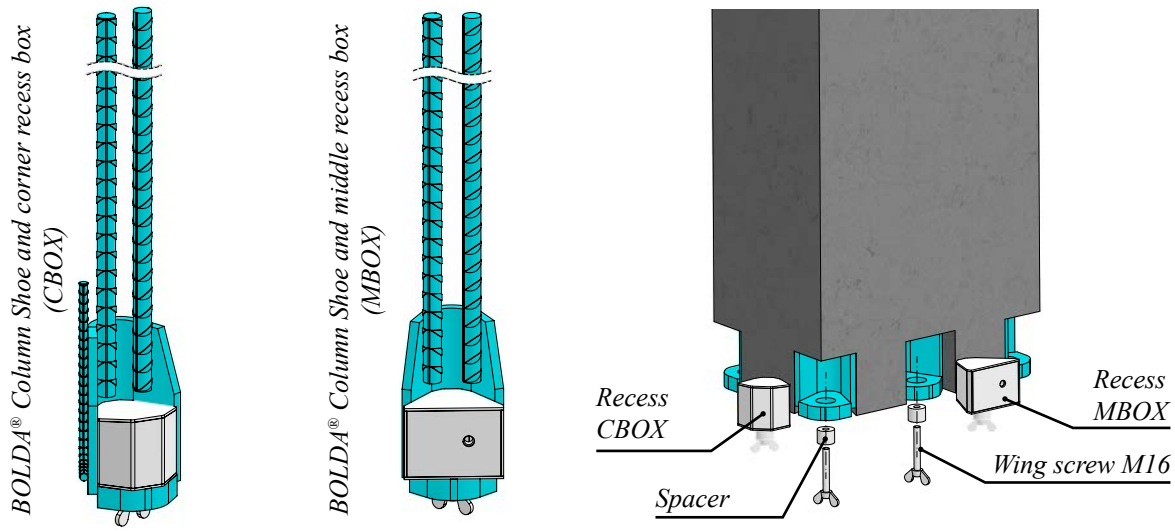

Recess boxes for corner and middle position of BOLDA® Column Shoe.

To ensure higher values of concrete cover thicknesses of the main anchor bars in accordance with chapter 1.2.3 of the technical manual, follow these instructions for increased values Δ_c of concrete cover:

- If $\Delta_c < 5mm$, there is no special request for recess boxes; instructions are same as for standard concrete cover of column shoes. The gap is too small to be filled up with concrete. However if the gap is filled or partially filled, the concrete shell can be easily crushed after removing mold.
- If $5\ mm \leq \Delta_c \leq 10mm$, self-adhesive foam tape or equivalent can be used to prevent the fill up of the gap. Foam tape of corresponding thickness Δ_c is fixed on two sides of the recess box.
- If $\Delta_c > 10mm$, to prevent the concrete to fill up the gap, it is recommended to use some kind of solid plate – e.g. plywood or hardened polystyrene of corresponding thickness Δ_c. These plates can be fixed to the surface of the mold.

*Use of **self-adhesive foam tape** to prevent the gap from filling up with concrete.*

*Use of **solid plates** to prevent the gap from filling up with concrete.*

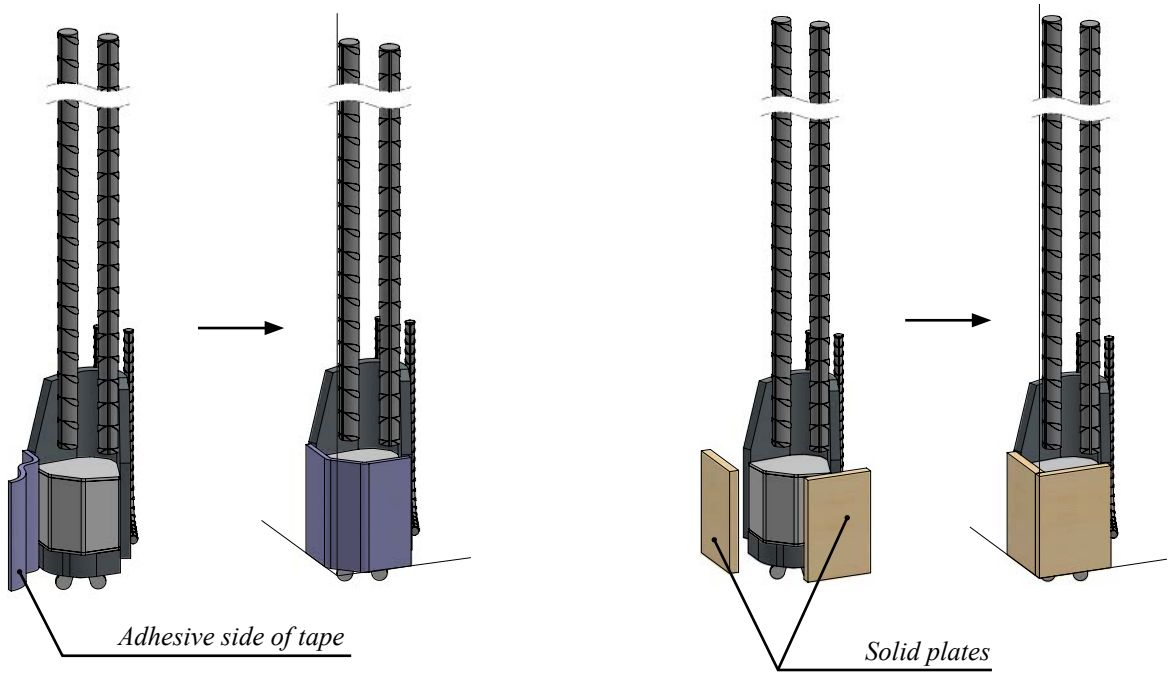

Ensure thicker concrete cover if using self-adhesive foam tape or solid plates

BOLDA® Column Shoes before and after casting.

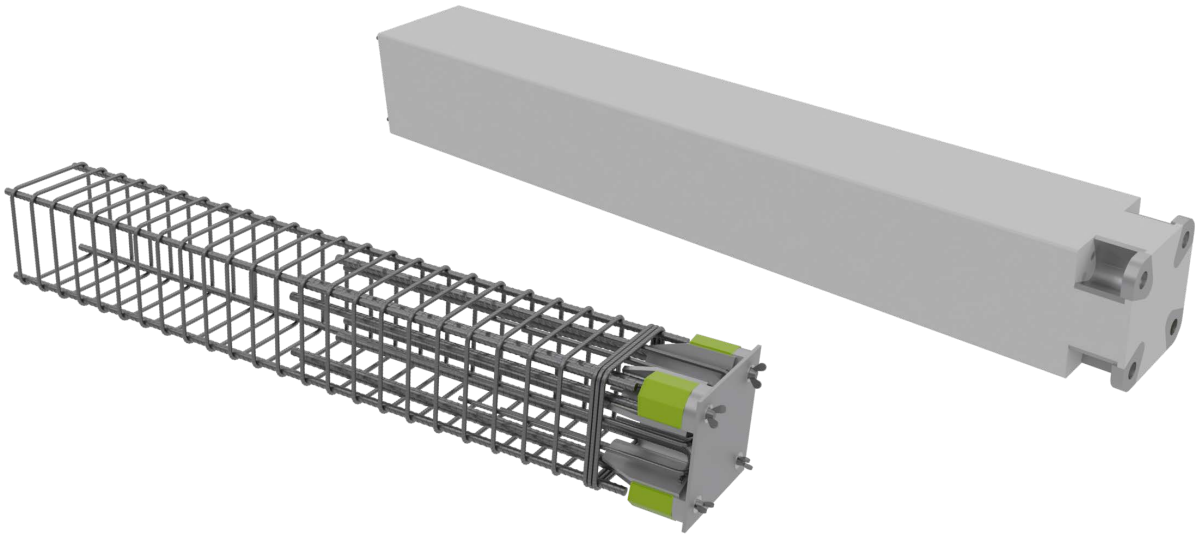

Construction site – Assembling the connection

Identification of the product

BOLDA® Column Shoes are available in standard models (30, 36, 39, 45 and 52) analogous to PPM® High-Strength Anchor Bolts or COPRA® Anchoring Coupler M-thread sizes. The model of column shoe can be identified by the name in the label on the product and also according to the color of the product. Color codes are shown in the table hereafter.

BOLDA® Column Shoe color identification.

Column Shoe	Color code	Anchor Bolt	Installation template
BOLDA 30	Black	PPM 30 / COPRA 30	PPL 30
BOLDA 36	Red	PPM 36 / COPRA 36	PPL 36
BOLDA 39	Brown	PPM 39 / COPRA 39	PPL 39
BOLDA 45	Violet	PPM 45 / COPRA 45	PPL 45
BOLDA 52	White	PPM 52 / COPRA 52	PPL 52

Erection of precast column

1. To level precast concrete column

Before erecting the column, upper nuts and washers are removed from anchor bolts. Lower leveling nuts and washers are adjusted at the correct level. The column is erected directly on the pre-leveled washers and nuts.

In alternative method shim plates are placed between anchor bolts and adjusted at the proper level. Lower leveling nuts must be leveled at least 5 mm under the top level of shims to secure that column will rest first on the shims. This method is recommended for heavier columns for easier and faster alignment of the column.

2. To align precast concrete column

Upper nuts and washers are screwed on the bolts and column is aligned in the vertical position by leveling nuts. It is practical to use long builder's spirit level, optical or laser level or two theodolites from different directions to ensure verticality. Adequate torque can be achieved typically by 10-15 impacts of a slog ring spanner (DIN 7444), combination spanner or open ended slogging spanner (DIN 133) and 1.5 kg sledgehammer.



3. To grout joint and recesses

Before loading the column by any other structures e.g. beams or columns, the joint underneath the column and bolt recesses must be grouted by following instructions of the grout supplier. The grout must be non-shrink grade and strength according to plans. To avoid air being trapped in the joint, it is recommended to pour grout from one side of the column only. Grouting formwork is made so that adequate concrete cover for column shoes and anchor bolts is achieved.

After grout has reached sufficient strength, the connection is finalized and joining structures may be erected on the column.

Erection of a precast concrete column step by step

The column is installed directly on the pre-leveled washers and nuts.

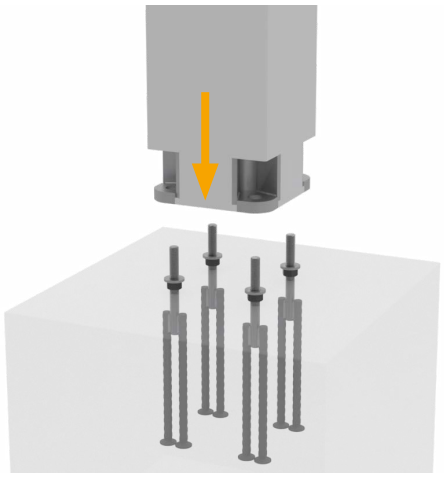

The upper nuts and washers are screwed onto the bolts.

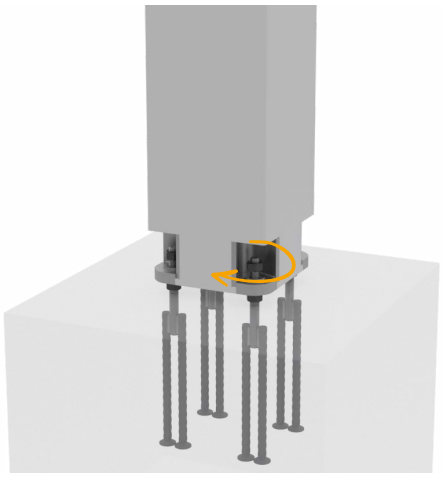

After the nuts are tightened, the crane can be released.

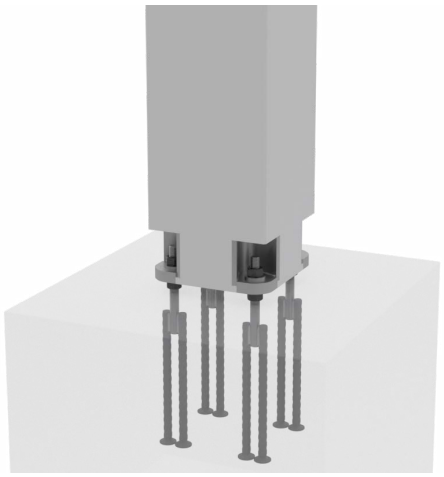

NOTE!
The open joint must be grouted, and the grout has to reach its designed strength before the column is loaded by other structures.

Formwork for grouting the joint and recesses.

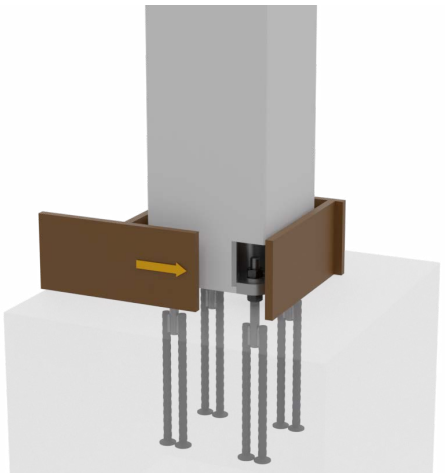

Finalized connection after grouting has hardened.

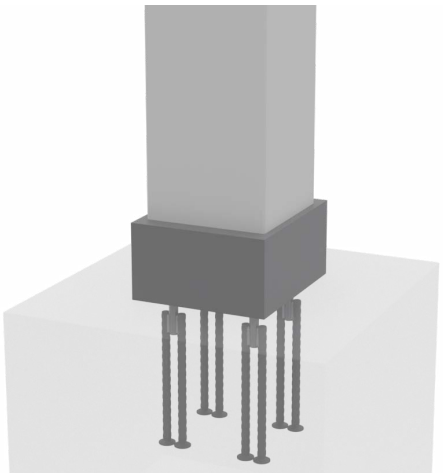

Alternative where grouting is aligned with column face.

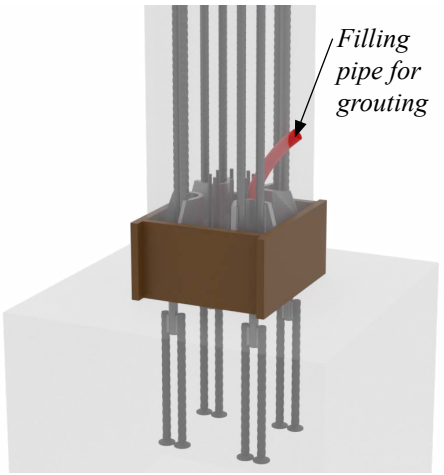

In column to foundation connections wider grouting can be provided to ensure higher concrete cover if it is required. It is recommended to increase the cover in aggressive environment.

Installation tolerances and the anchor bolt's protrusion from the surface of concrete when BOLDA® Column Shoes are used.

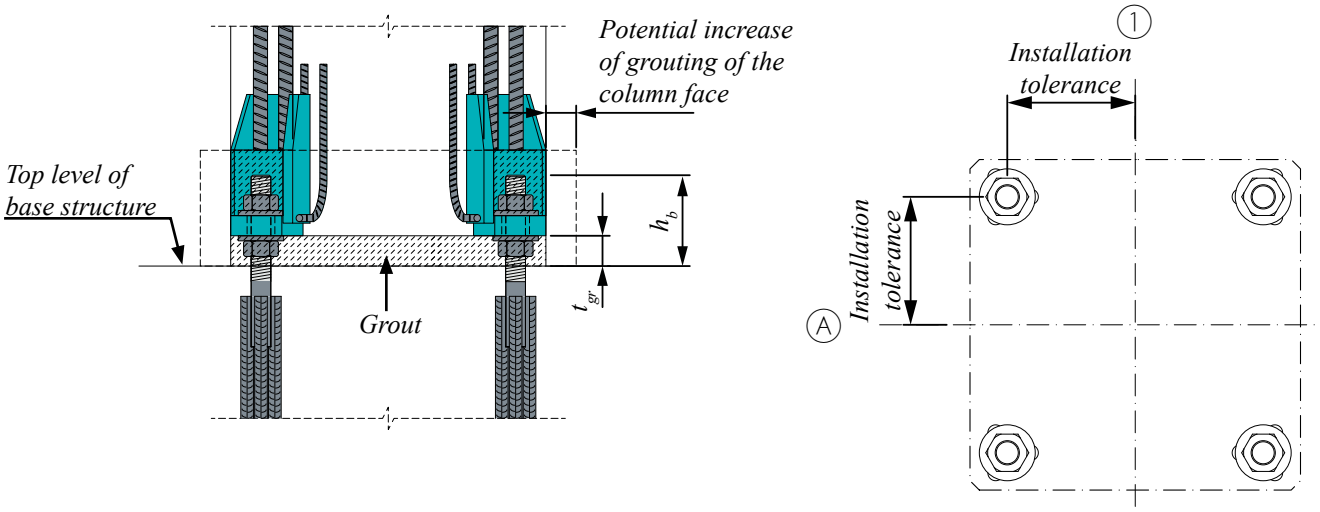

Column Shoe	BOLDA 30	BOLDA 36	BOLDA 39	BOLDA 45	BOLDA 52
Anchor Bolt	PPM 30	PPM 36	PPM 39	PPM 45	PPM 52
Thickness of grouting t_{gr} [mm]	50	55	60	65	70
Protrusion of bolt h_b [mm] [1)]	135	160	175	190	220
Installation tolerance for the bolt [mm]	±3	±4	±4	±4	±5

1) Anchor bolt protrusions h_b are guideline values and they are valid for grout thicknesses and corresponding BOLDA® Column Shoe in the table.

NOTES

NOTES

Fastcon

СРЕДСТВА ПРОЕКТИРОВАНИЯ

Пользуйтесь нашим профессиональным программным обеспечением, чтобы ускорить свою работу, а процесс расчета сделать простым и надежным. Средства проектирования Фасткон включают в себя программное обеспечение для проектирования, 3D компоненты для моделирования, инструкции по установке, технические руководства и сертификаты соответствия продукции Фасткон.

ТЕХНИЧЕСКАЯ ПОДДЕРЖКА

Команда нашей технической состоит из квалифицированных инженеров и доступна для помощи в составлении расчётов и ответов на ваши технические вопросы по проектированию, установке и применению продукции Фасткон

СЕРТИФИКАТЫ СООТВЕТСТВИЯ

Сертификаты соответствия, Технические руководства и другие нормативные документы размещены на официальных страницах продуктов на веб-сайте нашей компании.

ЭКОЛОГИЧЕСКИЕ ДЕКЛАРАЦИИ И СЕРТИФИКАТЫ СИСТЕМЫ МЕНЕДЖМЕНТА

Экологические декларации и сертификаты системы менеджмента размещены в разделе “Качество, окружающая среда и безопасность” на официальном веб-сайте нашей компании.

ООО «Фасткон»
194292, Россия, Санкт-Петербург
ул. Домостроительная, д. 16
Телефон: +7 (812) 329 07 04
www.fastcon.ru